DOMETIC

Pleated Side Blind SP 400
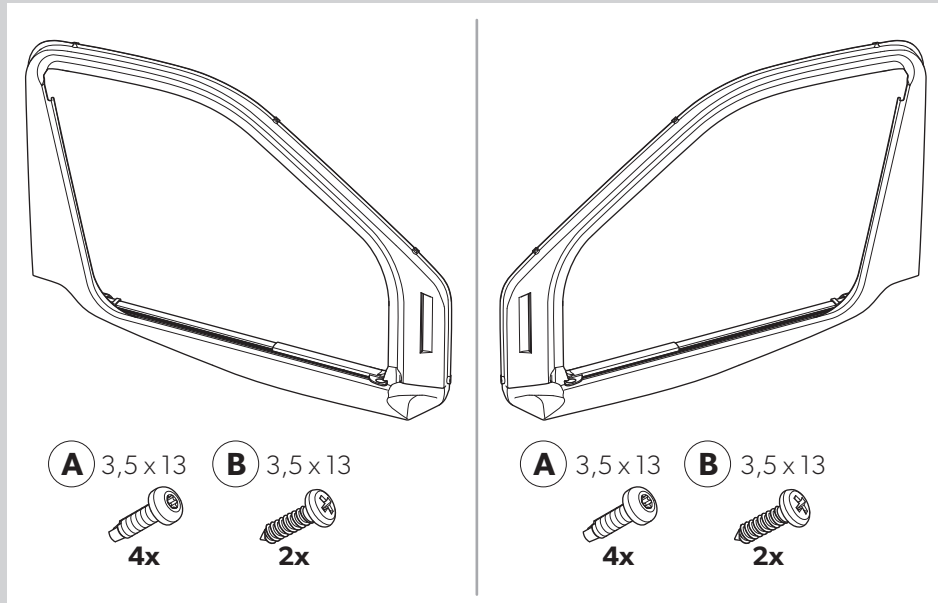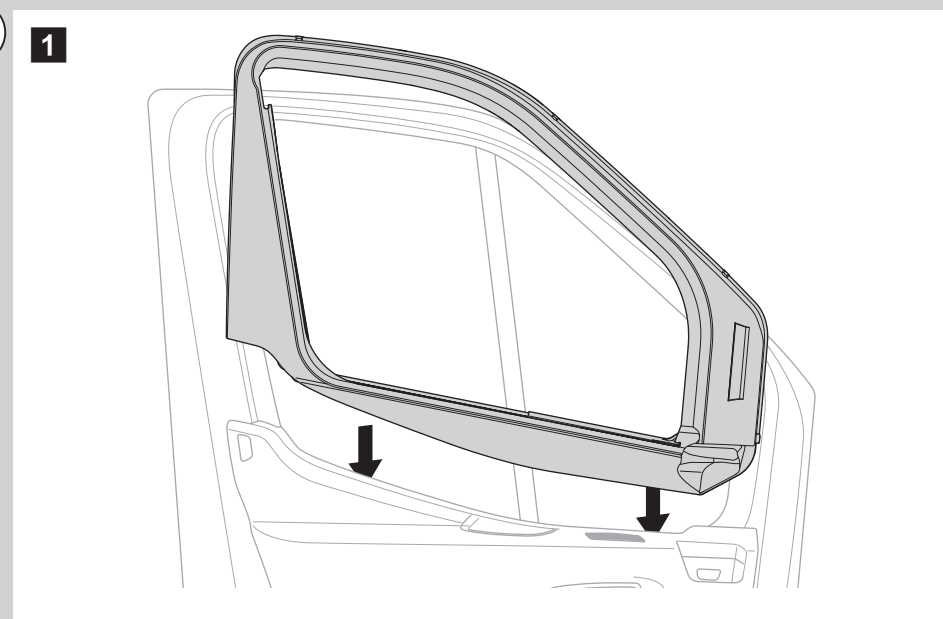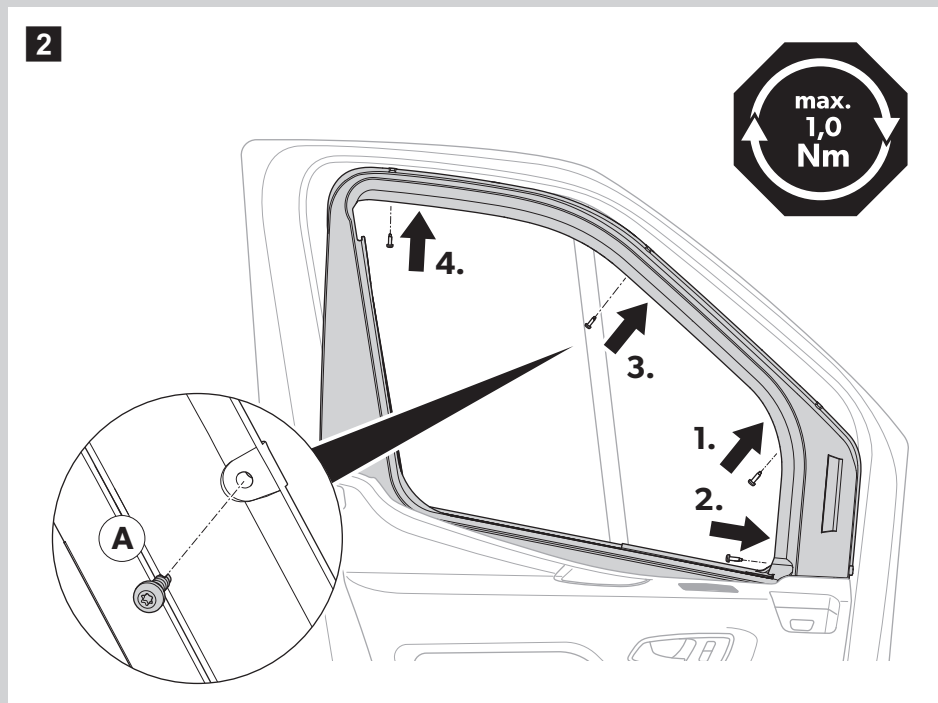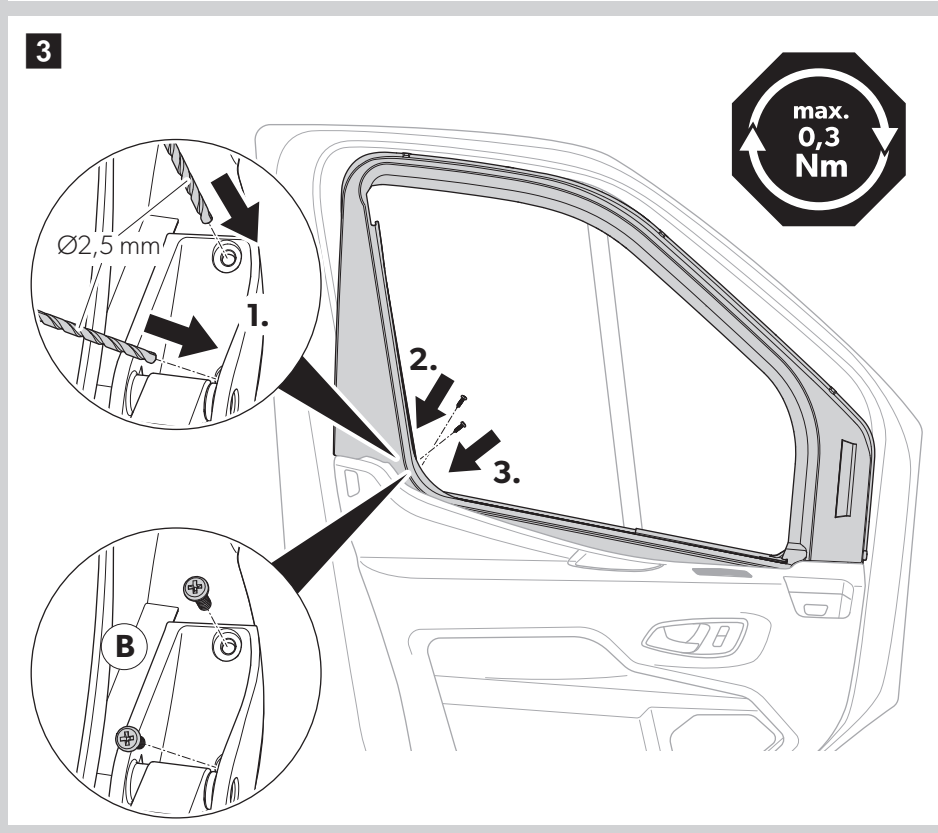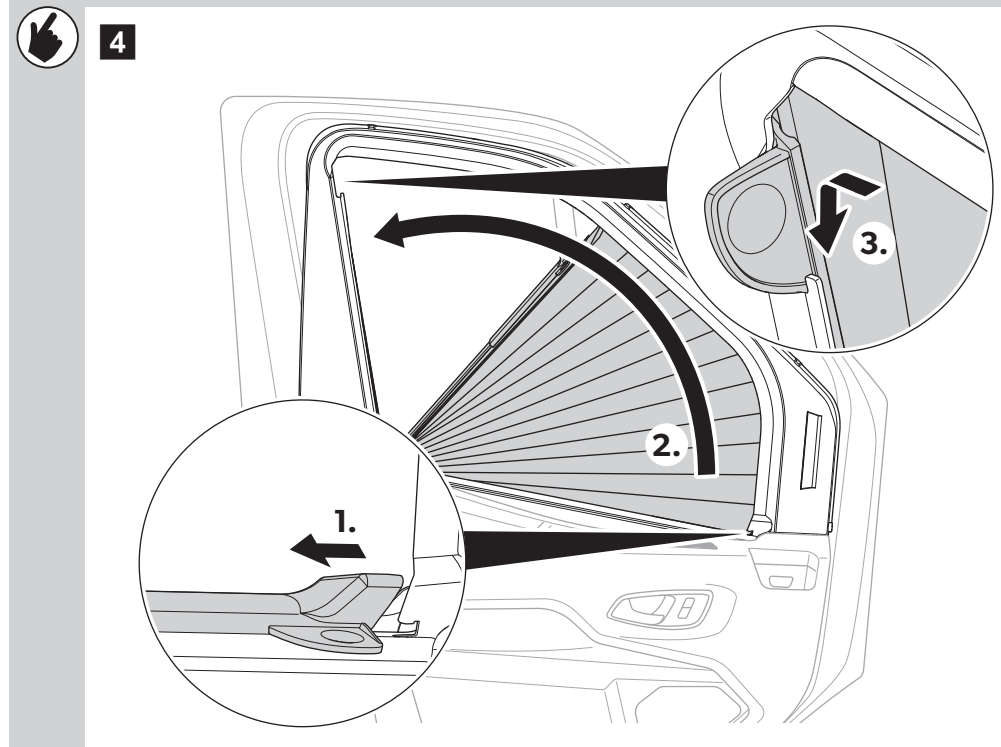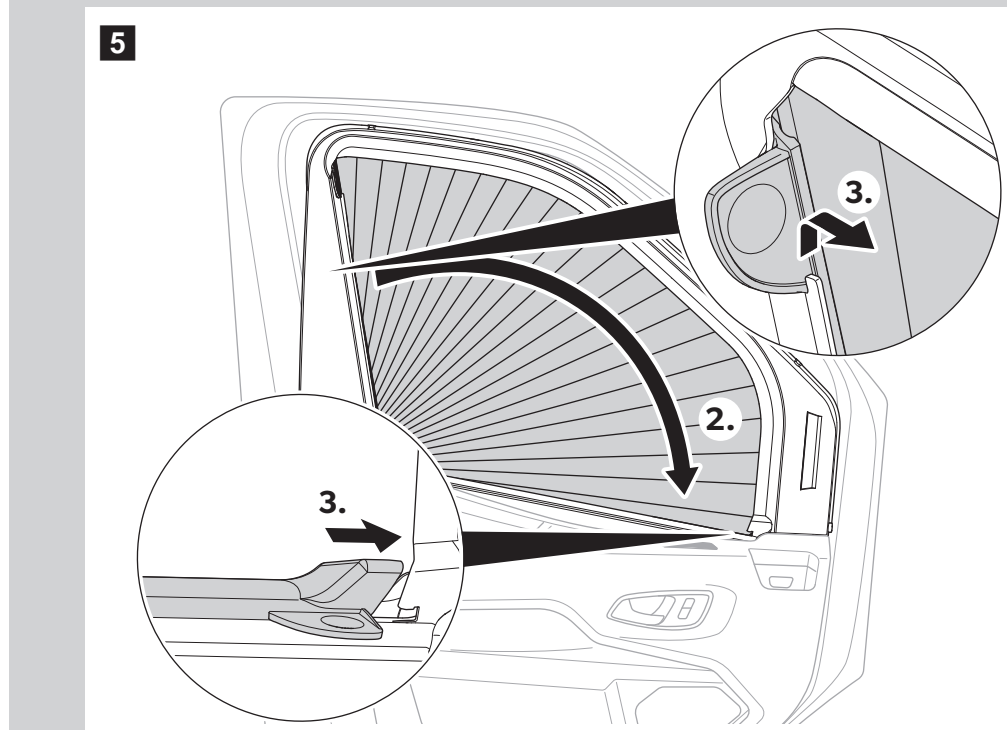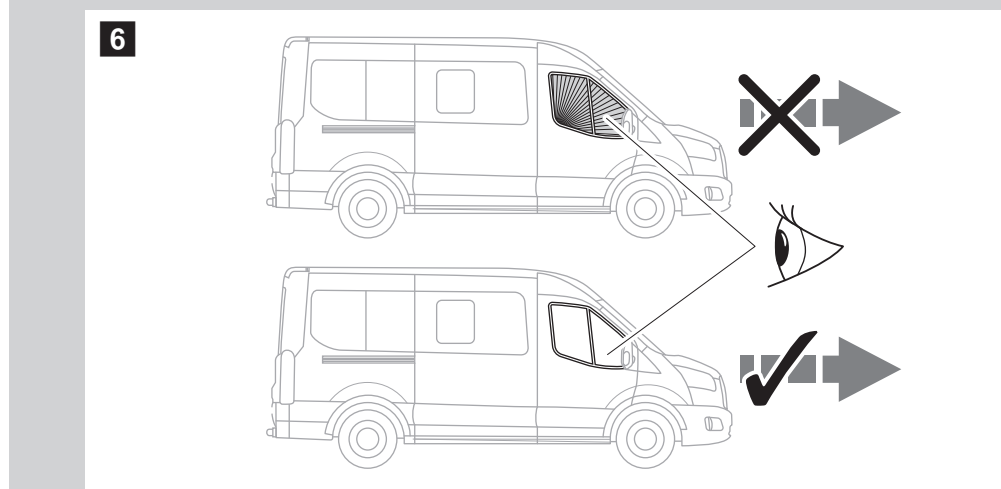
Ford Transit V363 (Facelift 2019 →)